SSF67 Series

Dual Switch Point Stainless

- ***Stainless Steel 316L material***
- ***Single or dual switching levels***
- ***Close tolerance switching***
- ***Process temperatures up to 135ºC***

Technical Specification

Mounting style	Internal	Cable length - standard	100cm
Mounting thread	M16	Cable conductor size	7/0.2
Float & Stem material	316 grade SS	Cable conductor material	Tinned copper
Maximum Temperature	135ºC	Cable sheath material	PVC
Maximum pressure	10 bar (up to 500mm length)	Cable temperature rating	125ºC
Float SG	0.7	Sealing gasket	Nitrile
Minimum fluid SG	0.8	Tightening torque for fixing nut	2.0kg/cm

Electrical Specification

Contact Form		N/O (N/C)
Switching Power Max	VA	25
Switching Voltage AC Max	V	250
Switching Voltage DC Max	V	120
Switching Current Max	A	0.6

All ratings are for resistive load only.

Standard Parts	Upper Level	Lower Level	Total Length	Application
SSF67A25B75	25mm	75mm	102mm	Max & Min
SSF67A25B100	25mm	100mm	127mm	Max & Min
SSF67A25B125	25mm	125mm	152mm	Max & Min
SSF67A25B150	25mm	150mm	177mm	Max & Min
SSF67A25B175	25mm	175mm	202mm	Max & Min
SSF67A25B200	25mm	200mm	227mm	Max & Min
SSF67A25B250	25mm	250mm	277mm	Max & Min
SSF67A25B300	25mm	300mm	327mm	Max & Min
SSF67A50A100	50mm	100mm	127mm	Empty control
SSF67A50A150	50mm	150mm	177mm	Empty control
SSF67A50A200	50mm	200mm	227mm	Empty control
SSF67A50A250	50mm	250mm	277mm	Empty control
SSF67B50B100	50mm	100mm	127mm	Fill control
SSF67B50B150	50mm	150mm	177mm	Fill control
SSF67B50B200	50mm	200mm	227mm	Fill control
SSF67B50B250	50mm	250mm	277mm	Fill control

Custom versions can be made for particular applications. Please contact Cynergy3 with your requirements.

Mechanical Dimensions

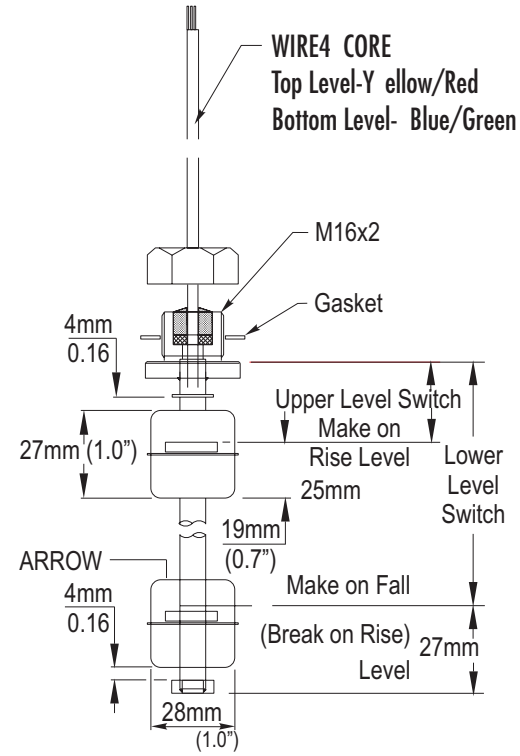

The SSF67 has been designed to give the user a long reach float switch with a number of switching options, to cater for a wide variety of system requirements. Manufactured in Stainless Steel 316L material, these switches are suitable for use in many aggressive liquids or hygienic applications.

The single float version gives high (make on rise) and low (make on fall) level indications for alarms and controls systems.

The dual float versions give either make on rise for both high and low levels (used for tank emptying control) or make on fall for both high and low levels (used for tank filling control).

The switches are screw mounted vertically via M16x2 thread, so require access to the inside of the tank.

Cynergy3 Components Ltd.
7 Cobham Road
Ferndown Industrial Estate
Wimborne, Dorset BH21 7PE
Telephone +44 (0) 1202 897969

Email:sales@cynergy3.com

ISO9001 CERTIFIED

www.cynergy3.com